Quick Setup Guide

WIS-ANS5818-90

1 Install the antenna

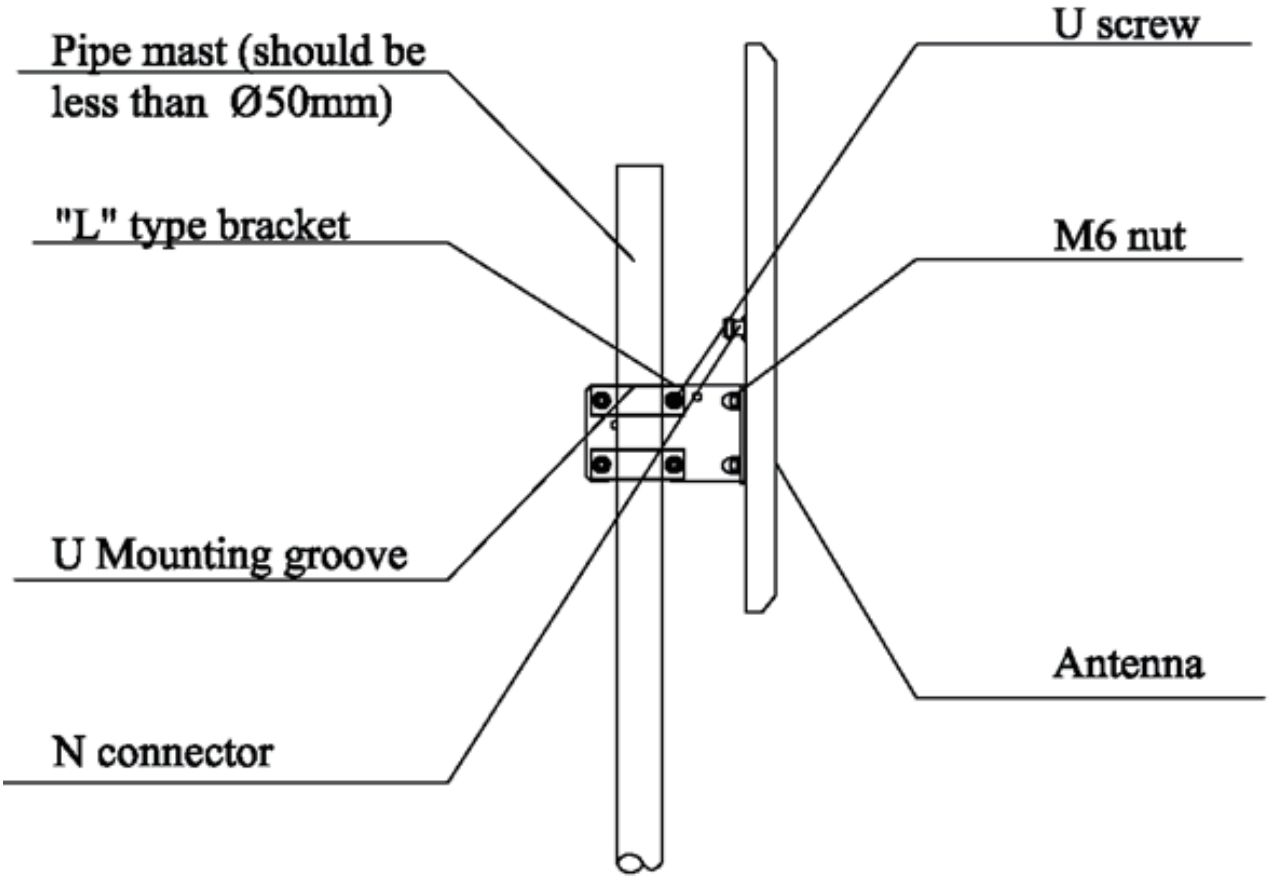

1. Attach the antenna to a pole which is less than Φ50mm.

2. Attach the 'L' type bracket to the back of the antenna, tighten with M6 nuts.

3. Thread the 'U' screws across the mounting pole and groove and at another side tighten with the M6 nuts.

⚠ Note

You should install the antenna at a proper height and tilt angle to provide target area wireless coverage.

2 Connect to wireless base station

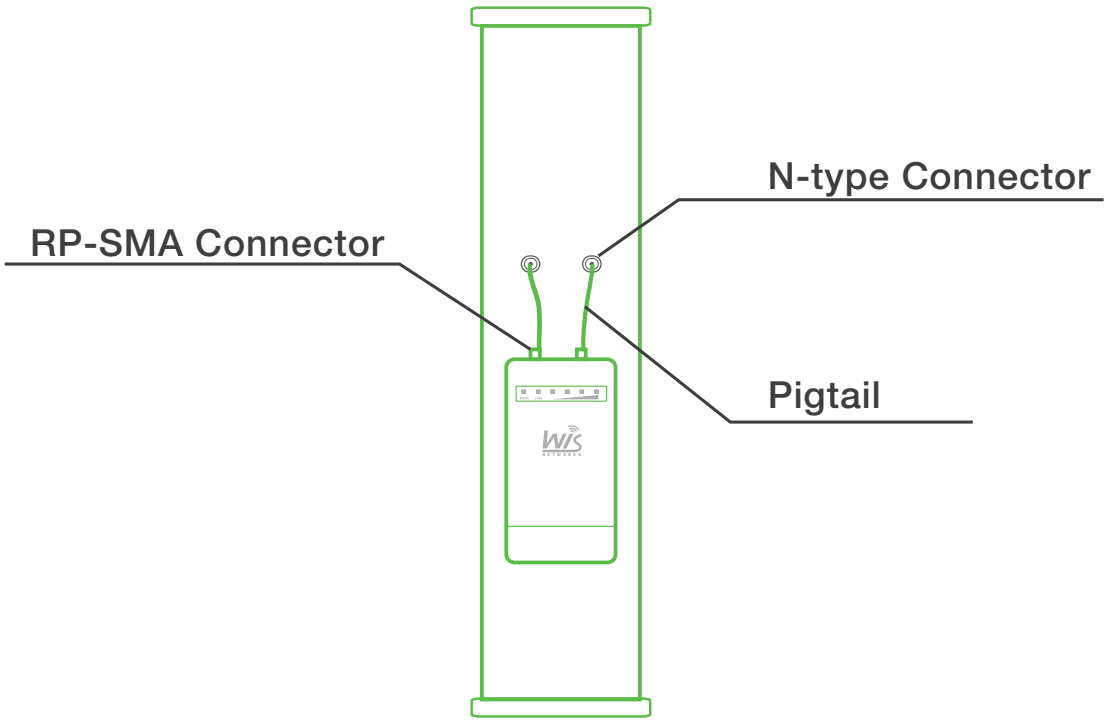

Connect the antenna to the base station, here we use WIS-S5300. With this model, you need a pigtail to connect the N-type connector on the antenna and the RP-SMA connector on the wireless device.

⚠ Note

The connectors on the antenna is default with N-type. We can customize them with RP-SMA connectors for better compatible with WIS-S series base station.

3 Antenna Specification

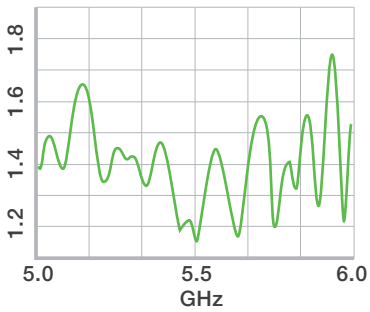

VSWR

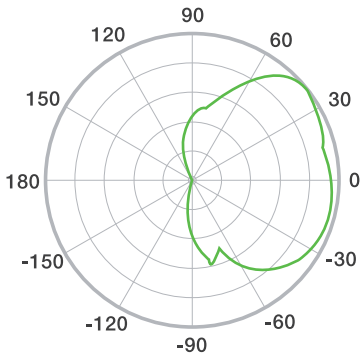

Azimuth

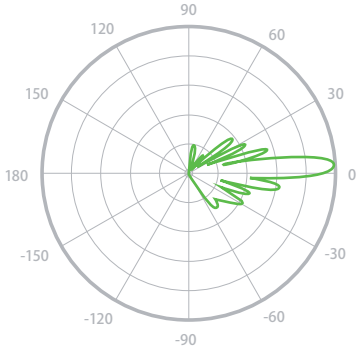

Elevation

SUPPORT

For more guide and help, please go to
http://www.wisnetworks.com/support

You can also contact
support@wisnetworks.com
We'll reply you within one weekday.

QUALIFICATION STATUS

QC: PASSED

Warranty Info

Model:	S/N:
Purchase Date:	Distributor:
Customer:	Address:
Contact:	Tel/Mobi:

Terms of Warranty:
You have 1 year warranty service from the date of purchasing Wisnetworks products.
In case of any below condition would not covered by warranty:
1. Damage by transportation and handling.
2. Damage by unauthorized disassembly.
3. Non-compliance of the using environment.
4. Force majeure factors like fire, earth quake, lightning, etc.
5. Human reasons without according to the guide or user manual.
6. Warranty S/N different with device S/N or obliterated